REVISION			
REV.	DATE	DESCRIPTION	DRAWN BY

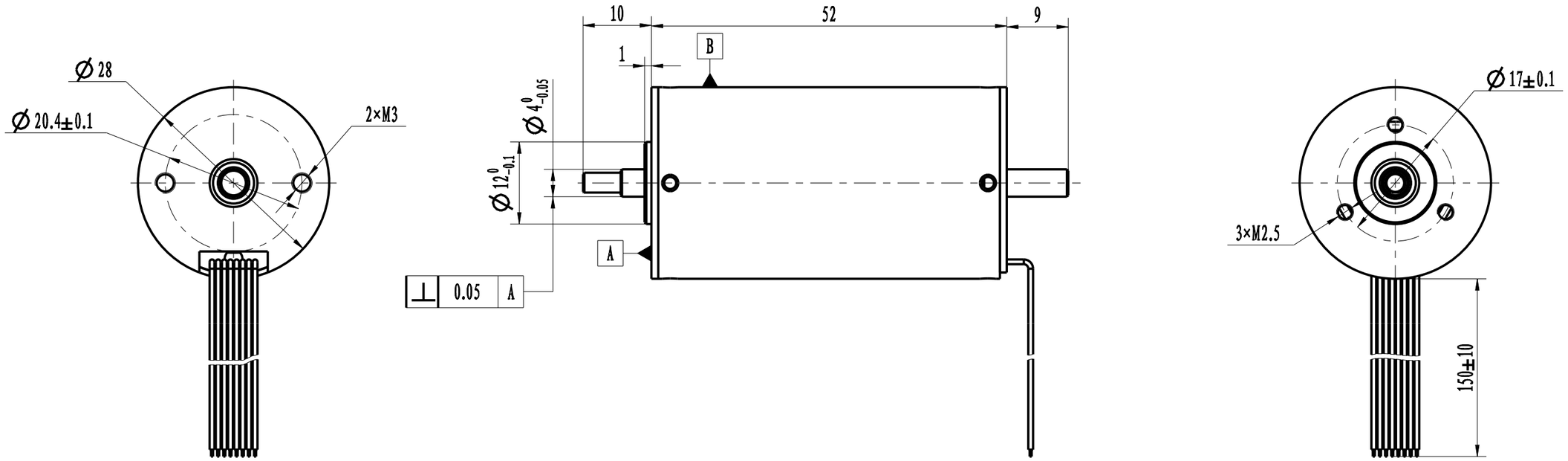

REDUCTION RATIO	/	DIELECTRICAL STRENGTH	AC500V,1mA,1s
POLE RAIRS	1	INSULATION RESISTANCE	100MΩ/DC500V
RATED VOLTAGE(VDC)	24	DUTY TYPE	S1
RATED CURRENT(A)	1.48	PROTECTION GRADE	/
RATED SPEED(RPM)	8400	INSULATION CLASS	F
RATED TORQUE(mN·m)	32	COOLING TYPE	/
RATED POWER(W)	34	TORQUE CONSTANT(mN·m/A)	21.62
BACK EMF CONSTANT(V/KRPM)	0.64	ROTOR INTERTIA(g·cm^2)	10.2

CUSTOMER

WIRING CHART

Line color line sequence

NOTICE TO PERSONS RECEIVING THIS DRAWING
THIS DRAWING IS ONLY CONDITIONALLY ISSUED, AND FOR THE SOLE PURPOSE OF INFORMING LICENSEES AND ASSOCIATE CONTRACTORS OF DINGS' MOTION, AND VENDORS THERETO AND CUSTOMERS THEREOF, RECEIPT OR POCESSION THEREOF DOES NOT CONFER TO TRANSFER ANY RIGHT IN THE SUBJECT MATTER OF THE DRAWING. THE DESIGN, CONSTRUCTION, TECHNICAL INFORMATION AND ALL OTHER SUBJECT MATTER SHOWNIN THIS DRAWING ARE AND REMAIN, EXCEPT AS MAY BE OTHERWISE INDICATED BY WRITTEN NOTICE HEREON, THE EXCLUSIVE PROPERTY OF SAID CORPORATION. THIS DRAWING MAY BE REPRODUCED ONLY BY LICENSEES AND ASSOCIATE CONTRACTORS OF SAID CORPORATION AND ONLY FOR LICENSED MANUFACTURE, AND BY VENDORS MANUFACTURING FOR SAID CORPORATION AND ONLY FOR LICENSEES AND ASSOCIATECONTRACTORS.

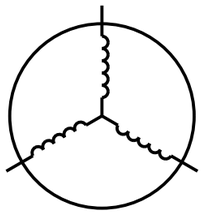

Wire gauge	Motor wire	Wire color	Wire gauge	Hall wire	Wire color
AWG 26	PHASE U	YE	AWG 26	+5 VDC	RD
	PHASE V	GN		HALL U	GY
	PHASE W	BN		HALL V	WH
				HALL W	BU
				GND	BK

UNLESS OTHERWISE SPECIFIED ALL DIMENSIONS ARE IN MILLIMETERS AND TOLERANCES ARE AS BELOW

LINERA		ANGULAR	
0~3	±0.2	0~10	±1.5°
3~6	±0.5	10~50	±1°
6~30	±0.8	50~120	±30′
30~120	±1.5	120~400	±15′

DRAWN		DATE	
CHECK		DATE	
APPRVD		DATE	
COUNTERSIGN		DATE	
MODEL			

DINGS

SIZE	A3	SHEET	1/1
SCALE	1:1	REV	A